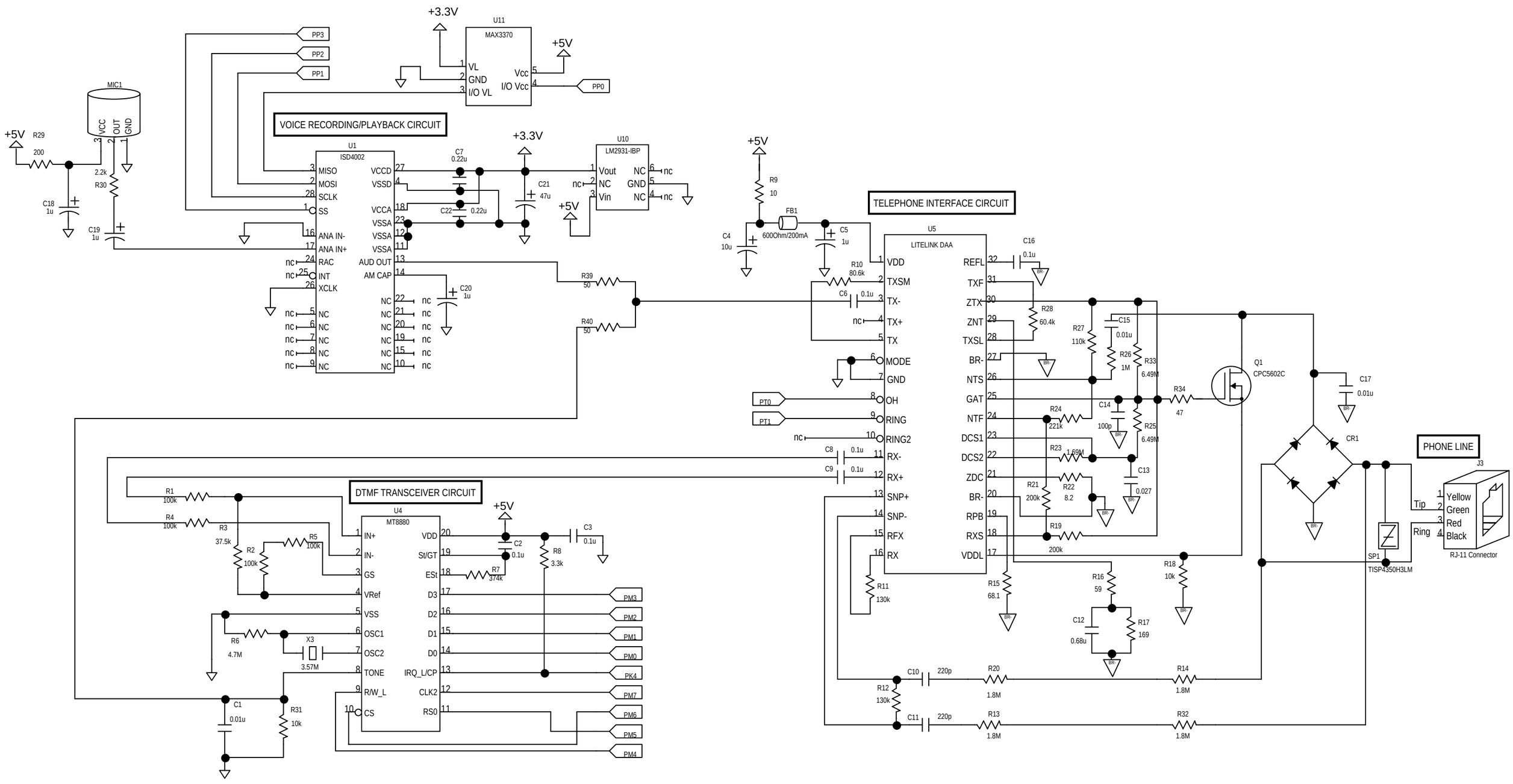

NAME: LEO WAN & JUSTIN KLUMPP	LAST DESIGNATOR USED
PROJECT: HOME CONTROL SYSTEM	C37 R48 U11 X3 MIC1 FB1 SW1
SCHEMATIC: BASE CONTROL MODULE: SHEET 1	CR1 Q2 SP1 J4 D1 B1 KP1
DATE: APRIL 14, 2006	ANT2 LED1 M1 K1 LCD1 Z1